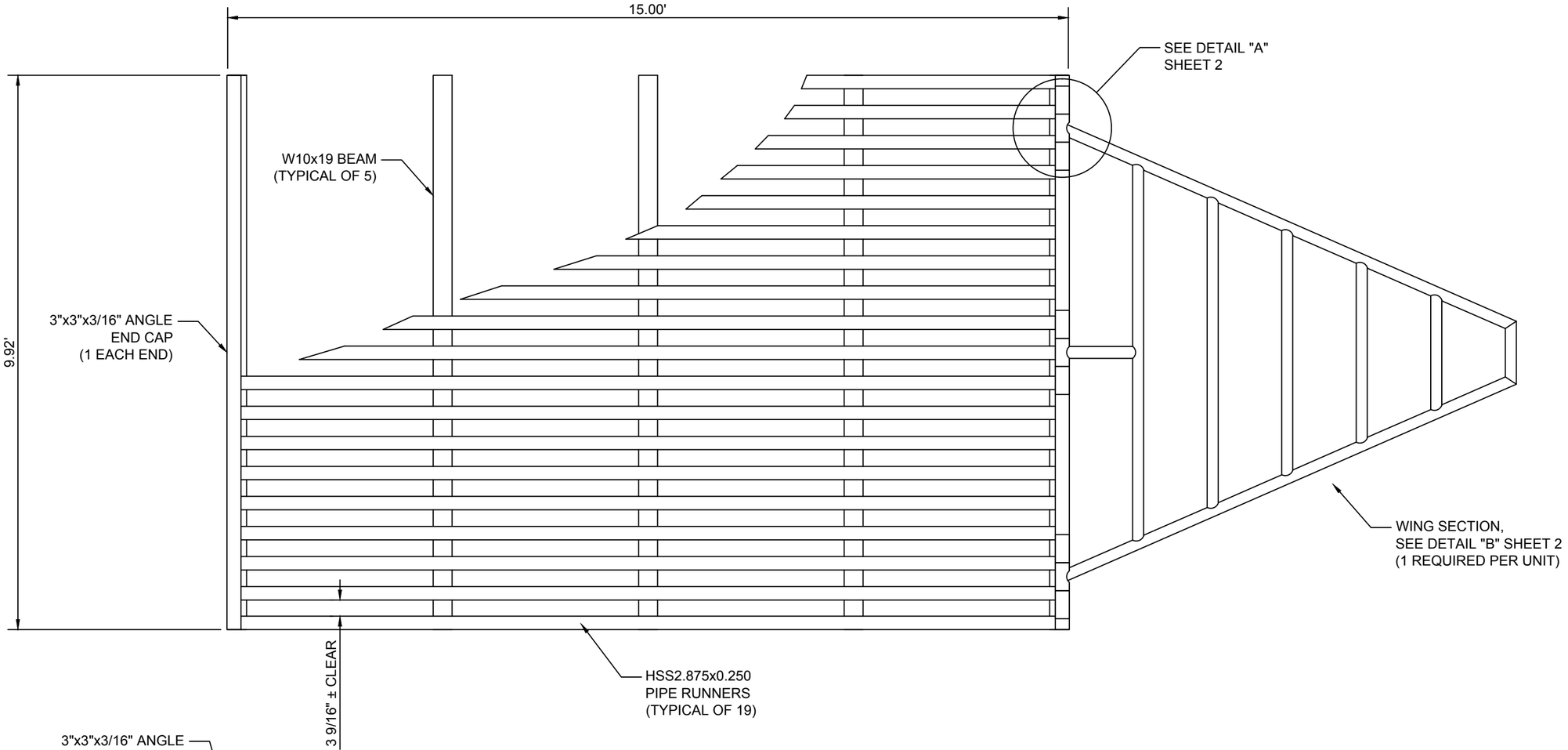

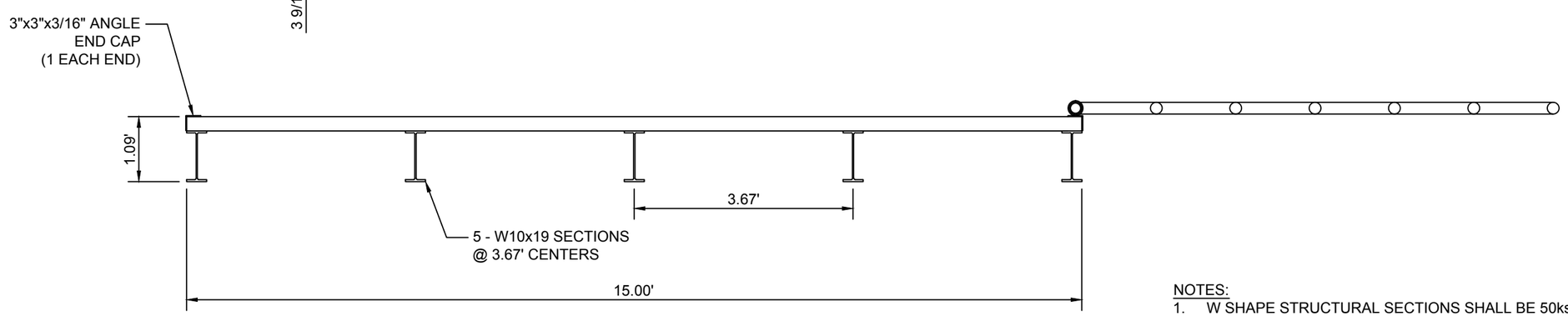

NOTES:

1. W SHAPE STRUCTURAL SECTIONS SHALL BE 50ksi YIELD STRENGTH.
2. HOLLOW STRUCTURAL SECTIONS SHALL BE 42ksi YIELD STRENGTH.
3. ROLLED ANGLE SECTIONS SHALL BE 36ksi YIELD STRENGTH.
4. COPE ENDS OF PIPES AT ALL CONNECTIONS.

No.	BY	CK	APP	Revision
4				
3				
2				
1				

Date
Designed By: CRG
Drawn By: CRG
Checked By:
Date:
Scale: as shown

Kansas Department of Wildlife, Parks and Tourism
Engineering Services Section
512 SE 25th Ave.
Pratt, Kansas 67124

Kansas Department of Wildlife, Parks and Tourism

MAXWELL WILDLIFE AREA
CATTLE GUARD CROSSINGS

DETAILS - 1

Project No.

SHEET 1

C:\Documents and Settings\Chad Grisier\Desktop\MAXR Cattle Guard.dwg, 4/18/2012 3:47:42 PM

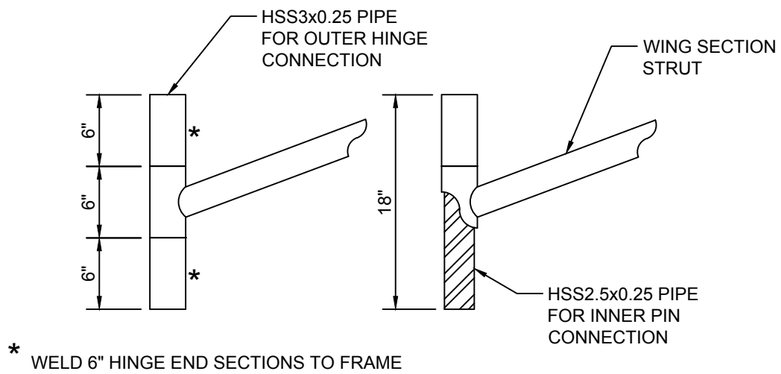

DETAIL "A"

NOT TO SCALE

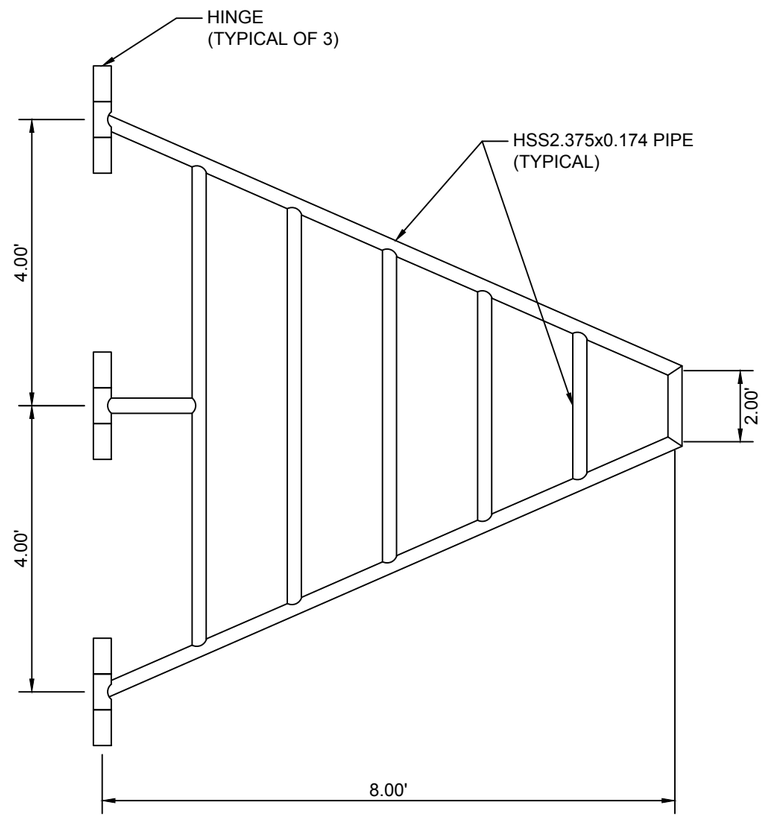

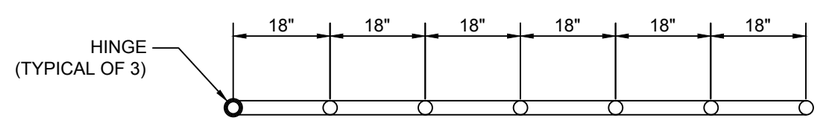

DETAIL "B"

NOT TO SCALE

No.	BY	CK	APP	Revision	Date
4					
3					
2					
1					

Designed By: CRG
Drawn By: CRG
Checked By:
Date:
Scale: as shown

Kansas Department of Wildlife, Parks and Tourism
Engineering Services Section
512 SE 25th Ave.
Pratt, Kansas 67124

Kansas Department of Wildlife, Parks and Tourism

MAXWELL WILDLIFE AREA
CATTLE GUARD CROSSINGS

DETAILS - 2

Project No.

SHEET 2

C:\Documents and Settings\Chad Grisier\Desktop\MAXR Cattle Guard.dwg, 4/18/2012 3:47:51 PM